5 Earthquake Resistant Design

Table of Contents

5.1 Design Philosophy

5.1.1 Objective

The primary objective of seismic design shall be to ensure that the bridge can safely perform its function of maintaining communications after a seismic event. The extent to which this is possible will depend on the severity of the event, and thus by implication on its return period. For design purposes, bridges shall be categorised according to their importance, and assigned a Risk Factor related to the seismic return period. This will then result in an equivalent design earthquake hazard and consequent loading as defined in 5.2. If the behaviour at this design intensity meets the criteria of (a), it is expected that with appropriate detailing, behaviour at other intensities as in (b) and (c) will also be satisfactory, and no further specific check is required.

The seismic performance requirements are as follows:

(a) After the design return period event, the bridge shall be usable by emergency traffic, although damage may have occurred, and some temporary repairs may be required. Permanent repair to reinstate the design capacities for both vehicle and seismic loading should be feasible.

(b) After an event with a return period significantly less than the design value, damage should be minor, and there should be no disruption to traffic.

(c) After an event with a return period significantly greater than the design value, the bridge should not collapse, although damage may be extensive. It should be usable by emergency traffic after temporary repairs and should be capable of permanent repair, although a lower level of loading may be acceptable.

The design of any bridge located in an area which is susceptible to earthquake induced liquefaction, or which is over an active fault with a recurrence interval of 2000 years or less, shall recognise the large movements which may result from settlement, rotation or translation of piers. To the extent practical and economic, and taking into consideration possible social consequences, measures shall be incorporated to mitigate against these effects.

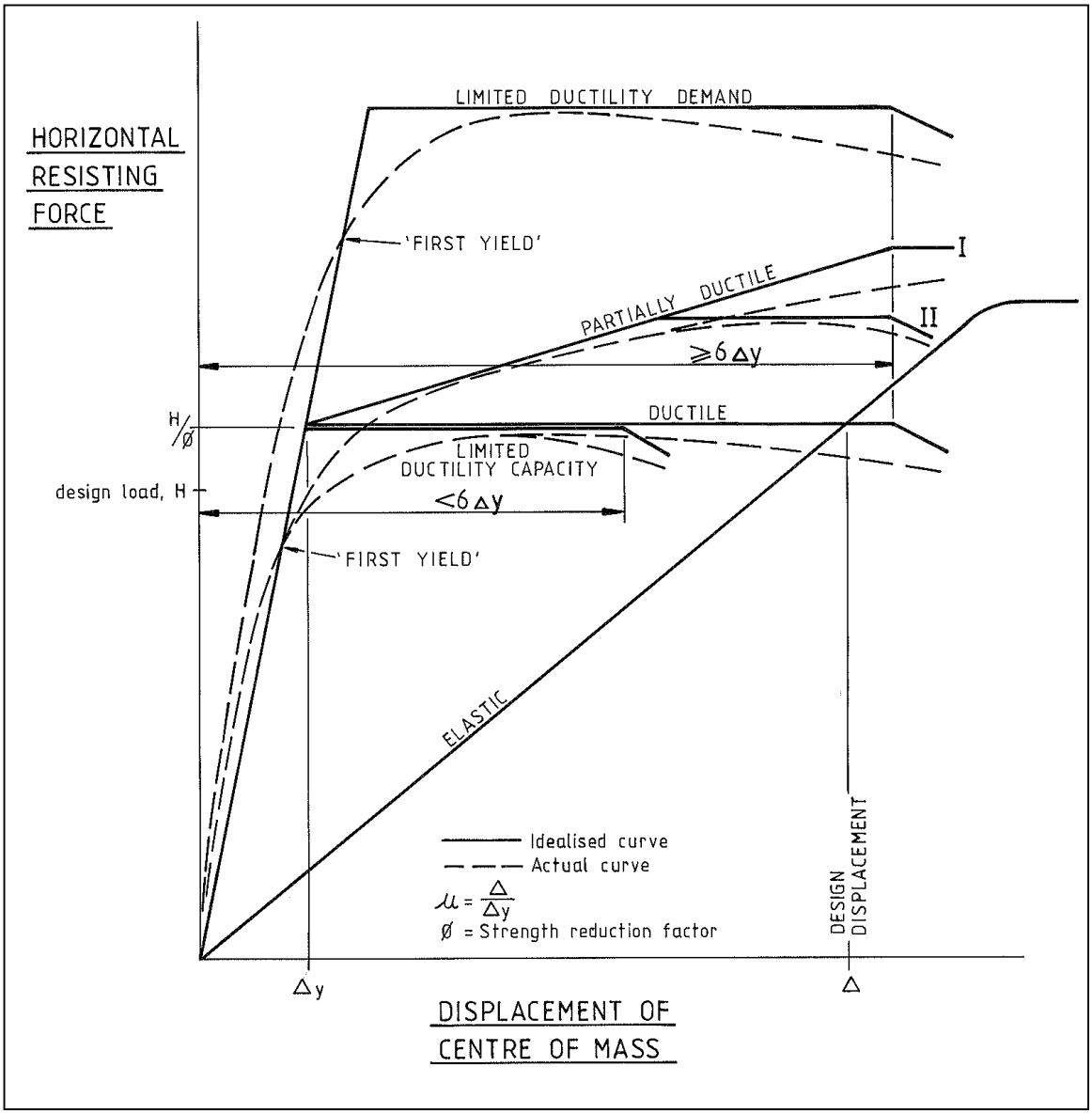

Figure 5.1: Idealised Force/Displacement Relationships for Various Structural Categories

5.1.2 Background and Commentary

The earthquake provisions included in this edition of the Bridge Manual have been developed with reference to NZS 4203:1992[1]. Where appropriate, text, figures and tables have been included with or without modification. The reader is referred to NZS 4203:1992, Volume 2, Commentary for background information relating to NZS 4203:1992[1].

5.1.3 Structural Action

For design purposes, each structure shall be categorised according to its structural action under horizontal seismic loading. Categories are defined in (a) to (h) below, with reference to the relationship between the total applied horizontal loading and the resulting displacement of the centre of mass of the whole superstructure. Figure 5.1 illustrates the force/displacement relationships, and defines yield force, yield displacement (Δ_y) and displacement ductility factor (μ).

The maximum allowable values of design ductility (μ) are specified in 5.2.3.

In cases where large ductility demands are placed on concrete members due to flexibility of foundations or bearings, special analyses shall be made and steps taken to limit the likelihood of damage during less severe shaking.

(a) Ductile Structure

Under horizontal loading, a plastic mechanism develops. After yield, increasing horizontal displacement is accompanied by approximately constant total resisting force. A ductile structure must be capable of sustaining a ductility factor of at least six, through at least four cycles to maximum design displacement, with no more than 20% reduction in horizontal resistance. For the purpose of determining the design load, the design ductility value is restricted to six or less, as specified in 5.2.3 and Table 5.4.

(b) Partially Ductile Structure (Types I and II)

Under horizontal loading, a plastic mechanism forms in only part of the structure, so that after yield there is a significant upward slope in the force/displacement relationship.

In a Type I structure, this continues up to design displacement.

In a Type II structure, a complete mechanism will form after further displacement, but the load at which this happens may not be predictable if it is due to hinging in piles.

(c) Structure of Limited Ductility Demand

This structure is subjected to limited ductility demand under design earthquake. It may otherwise qualify as Ductile or Partially Ductile, but its proportions are such that its yield strength exceeds the design load, and consequently the ductility demand is less than the maximum value of six.

(d) Structure of Limited Ductility Capacity

This structure may otherwise qualify as Ductile or Partially Ductile, but its proportions or detailing mean that its ductility capacity is less than six. The design load shall be determined according to the relevant curve on the seismic hazard response spectrum, factored as specified in 5.2.2.

(e) Elastic Structure

This structure remains elastic up to or above the design load. It might have little or no reserve ductility after reaching its load capacity, which, while undesirable, may be unavoidable. In this case, detailing shall be such that while there may be a low standard of post-elastic behaviour, the risk of collapse is not greater than for a ductile structure.

(f) Structure Incorporating Mechanical Energy Dissipating Devices

This structure may be ductile, partially ductile, or of limited ductility demand, depending on the type of dissipator or mounting used.

(g) Structure "Locked in" to the Ground

This is an elastic structure which relies on the integrity of the abutment approach material, usually for longitudinal seismic resistance. It is assumed to move with ground acceleration.

(h) Structure on Rocking Piers

This is a special case of ductile structure, in which spread footing foundations tend to lift at alternate edges and the deformation of the soil and impact effects provide energy dissipation. Because of the lack of experimental or practical experience of the system, a maximum value of μ = 3 shall be adopted, unless a larger value can be specifically justified.

5.2 Design Earthquake Loading and Ductility Demand

5.2.1 Site Subsoil Categories

Site subsoil category (a) (Rock or very stiff soil sites)

Sites where the low amplitude natural period is less than 0.25 s, or sites with bedrock, including weathered rock, with unconfined compressive strength greater than or equal to 500 kPa, or with bedrock overlain by:

(i) Less than 20 m of very stiff cohesive material with undrained shear strength exceeding 100 kPa; or

(ii) Less than 20 m of very dense sand, with $N_1 > 30$, where N_1 is the SPT (N) value corrected to an effective overburden pressure of 100 kPa; or

(iii) Less than 25 m of dense sandy gravel with $N_1 > 30$.

Site subsoil category (b) (Intermediate soil sites)

Sites not described as category (a) or (c) may be taken as intermediate soil sites.

Site subsoil category (c) (Flexible or deep soil sites)

Sites where the low amplitude natural period exceeds 0.6 s, or sites with depths of soils exceeding the values given in Table 5.1.

Table 5.1: Site Subsoil Category (c)

Soil type and description		Depth of soil (m)
Cohesive soil	Representative undrained shear strengths (kPa)	
Soft	12.5 – 25	20
Firm	25 – 50	25
Stiff	50 – 100	40
Very stiff	100 – 200	60
Cohesionless soil	Representative SPT (N) values	
Loose	4 – 10	40
Medium dense	10 – 30	45
Dense	30 – 50	55
Very dense	> 50	60
Gravels	> 30	100

5.2.2 Horizontal Loading

The design earthquake hazard is defined by the response spectrum appropriate to the site subsoil categories defined in 5.2.1. The spectra are shown in Figures 5.2 (a), (b) and (c). Response spectral accelerations shall be factored by the zone, risk and structural performance factors specified. The method of application depends on the type of analysis adopted for the structure, as referred to in 5.2.2 (a), (b) and (c).

The need to increase the design earthquake loading due to possible local site effects or location shall be considered. For bridges in importance category 1 of Table 5.5 costing more than $1.07 million, or in category 2 costing more than $2.15 million, or in category 3 costing more than $3.22 million, if the site lies within 10 km of an active fault with an average recurrence interval of 1000 years or less, the design loading shall be derived using a site specific study. Site specific studies shall be treated as Special Studies in accordance with 2.7. Where significant these aspects and their implications for the design shall be discussed in the Design Statement. The values stated are at a *Statistics New Zealand Producers Price Index (Outputs)*[2]

Construction Index of 1908, as for March 2003. Values shall be corrected to the current index.

A combination of the effects of orthogonal seismic actions shall be applied to the structural elements to account for the simultaneous occurrence of earthquake shaking in two perpendicular horizontal directions. Seismic forces and moments on each of the principal axes of an element shall be derived as set out below. The absolute values of effects (forces or moments) resulting from the analyses in two orthogonal directions shall be combined to form two load cases as follows:

LOAD CASE 1: 100% of the effects resulting from analysis in direction x (eg, longitudinal) plus 30% of the effects resulting from analysis in the orthogonal direction y (eg, transverse).

LOAD CASE 2: 100% of the effects resulting from analysis in direction y (eg transverse) plus 30% of the effects resulting from analysis in the orthogonal direction x (eg longitudinal).

(a) Equivalent Static Force Analysis

For a structure represented as a single-degree-of-freedom oscillator, the minimum horizontal seismic base shear force, V, for the direction being considered, shall be calculated as:

$$V = C_\mu \, Z \, R \, S_P \, W_d \text{, but not less than } 0.05W_d$$

Where: C_μ = basic acceleration coefficient, from Figure 5.2 and Table 5.2, according to the value of T and the site subsoil category.

Z = zone factor from Figure 5.3

R = risk factor, defined in Table 5.5

S_P = structural performance factor, defined in Table 5.6

W_d = total dead weight plus superimposed dead weight (force units) assumed to participate in seismic movements in the direction being considered.

T = the fundamental natural period (1st translational mode) of the structure in the direction being considered. The calculation of T shall be based on the combined stiffness of all supports in the direction being considered, and on elastic material properties as defined in 5.3.4 (a).

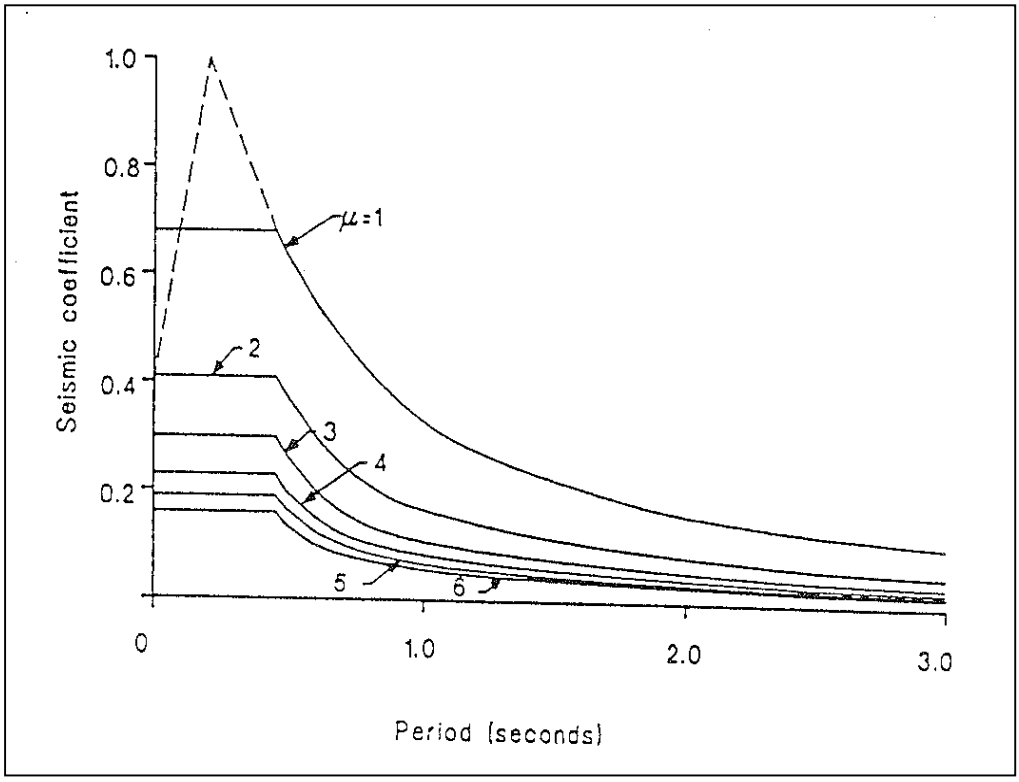

Period, T Seconds	Structural ductility factor, μ					
	1.0	2.0	3.0	4.0	5.0	6.0
0	0.40 0.68	0.41	0.30	0.23	0.19	0.16
0.2	1.00	0.41	0.30	0.23	0.19	0.16
0.45	0.68	0.41	0.30	0.23	0.19	0.16
0.5	0.63	0.37	0.26	0.20	0.16	0.14
0.6	0.55	0.30	0.20	0.15	0.13	0.10
0.7	0.48	0.24	0.16	0.12	0.10	0.082
0.8	0.42	0.21	0.14	0.11	0.084	0.071
0.9	0.37	0.19	0.12	0.093	0.074	0.063
1.0	0.33	0.17	0.11	0.083	0.066	0.056
1.5	0.23	0.12	0.076	0.058	0.046	0.039
2.0	0.17	0.085	0.056	0.043	0.034	0.029
2.5	0.13	0.065	0.043	0.033	0.026	0.022
3.0	0.11	0.055	0.036	0.028	0.022	0.019

Figure 5.2(a) and Table 5.2(a): Basic Seismic Hazard Acceleration Coefficient, C_μ
Site subsoil category (a) (Rock or very stiff soil sites)

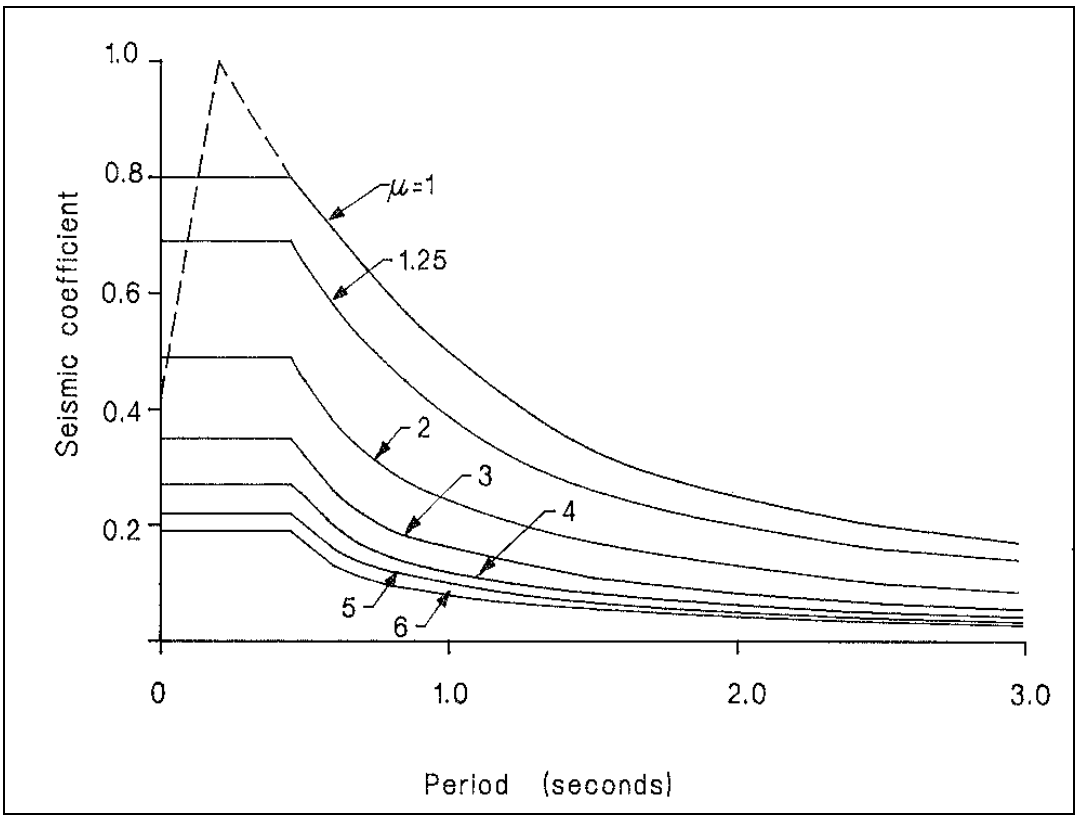

Period, T Seconds	Structural ductility factor, μ					
	1.0	2.0	3.0	4.0	5.0	6.0
0	0.42 0.80	0.49	0.35	0.27	0.22	0.19
0.2	1.00	0.49	0.35	0.27	0.22	0.19
0.45	0.80	0.49	0.35	0.27	0.22	0.19
0.5	0.77	0.45	0.32	0.25	0.20	0.17
0.6	0.71	0.38	0.26	0.20	0.16	0.13
0.7	0.65	0.33	0.22	0.17	0.13	0.11
0.8	0.60	0.30	0.20	0.15	0.12	0.10
0.9	0.55	0.28	0.18	0.14	0.11	0.094
1.0	0.50	0.25	0.17	0.13	0.10	0.085
1.5	0.33	0.17	0.11	0.083	0.066	0.056
2.0	0.25	0.13	0.083	0.063	0.050	0.043
2.5	0.20	0.10	0.066	0.050	0.040	0.034
3.0	0.17	0.085	0.056	0.043	0.034	0.029

Figure 5.2(b) and Table 5.2(b): Basic Seismic Hazard Acceleration Coefficient, C_μ
Site subsoil category (b) (Intermediate soil sites)

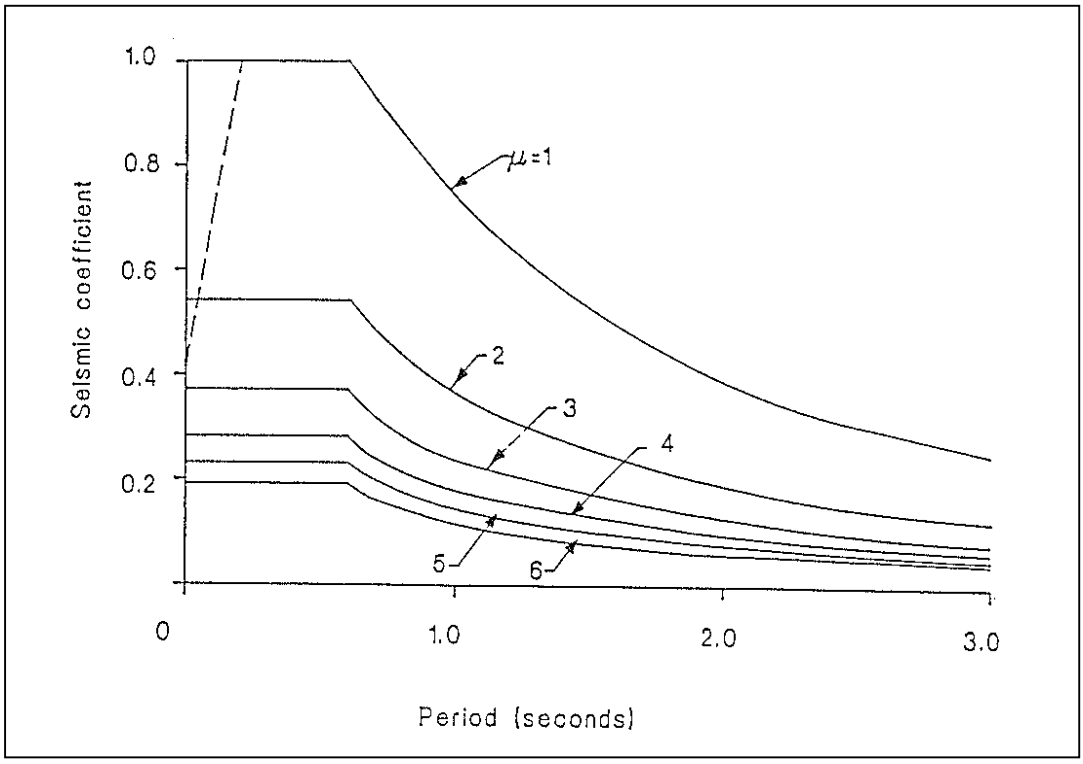

Period, T Seconds	Structural ductility factor, μ					
	1.0	2.0	3.0	4.0	5.0	6.0
0	0.42 1.00	0.54	0.37	0.28	0.23	0.19
0.2	1.00	0.54	0.37	0.28	0.23	0.19
0.45	1.00	0.54	0.37	0.28	0.23	0.19
0.5	1.00	0.54	0.37	0.28	0.23	0.19
0.6	1.00	0.54	0.37	0.28	0.23	0.19
0.7	0.94	0.47	0.31	0.24	0.19	0.16
0.8	0.88	0.44	0.29	0.22	0.18	0.15
0.9	0.81	0.41	0.27	0.20	0.16	0.14
1.0	0.75	0.38	0.25	0.19	0.15	0.13
1.5	0.52	0.26	0.17	0.13	0.10	0.088
2.0	0.38	0.19	0.13	0.095	0.076	0.065
2.5	0.30	0.15	0.099	0.075	0.060	0.051
3.0	0.25	0.13	0.083	0.063	0.050	0.043

Figure 5.2(c) and Table 5.2(c): Basic Seismic Hazard Acceleration Coefficient, C_μ
Site subsoil category (c) (Flexible or deep soil sites)

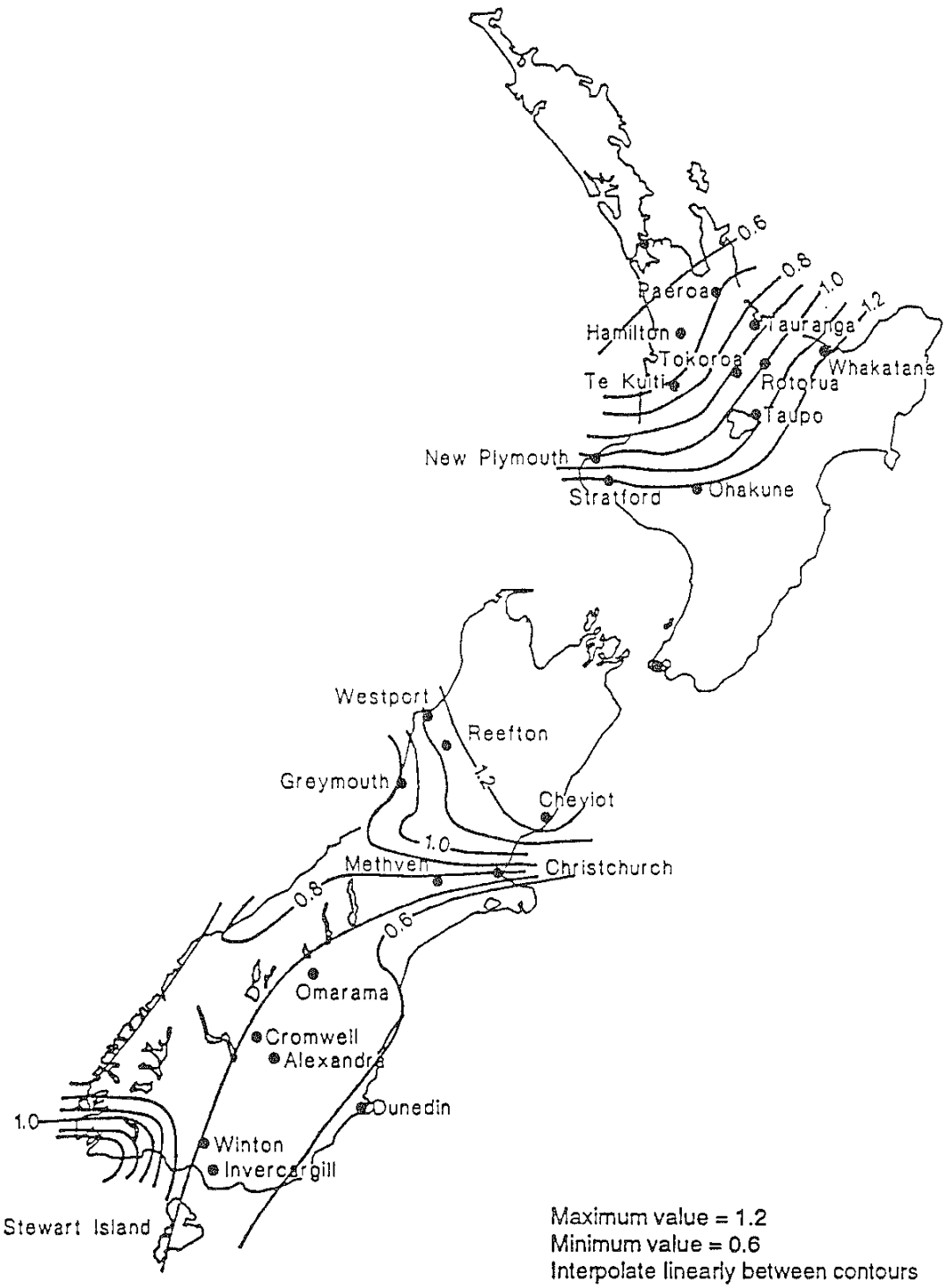

Figure 5.3: Zone Factor, Z

(b) Modal Analysis

For modal analysis the design load shall be derived from the basic elastic seismic hazard spectrum ($\mu = 1$) in Figure 5.2, appropriate to the site subsoil category. The resulting moments and forces shall be factored by the zone, risk and structural performance factors specified in Figures 5.3, and Tables 5.5 and 5.6 respectively, and by the design spectrum scaling factor S_m, which shall be the maximum of S_{m1} and S_{m2} from (i) and (ii) below:

(i) S_{m1} shall be obtained from Table 5.3 using T, the fundamental translational period of the structure for the direction being considered.

(ii) $S_{m2} = V/V_{base(1)}$

where V is as given in 5.2.2(a) and $V_{base(1)}$ is the combined modal base shear for the direction being considered and taking $S_m = 1$.

In applying Figure 5.2, the following shall be noted:

The dotted portion of each curve shall be used instead of the plateau to obtain ordinates for the higher mode responses of inelastically responding structures analysed by elastic techniques, and for elastically responding structures. Ordinates for first mode response shall not be less than the plateau values.

Table 5.3 : Design Spectrum Scaling Factor, S_{m1}

T (seconds)	Structural ductility factor, μ					
	1.0	**2.0**	**3.0**	**4.0**	**5.0**	**6.0**
[0.45	1.0	0.61	0.44	0.34	0.28	0.24
0.50	1.0	0.58	0.41	0.32	0.26	0.22
0.60	1.0	0.54	0.37	0.28	0.23	0.19
/0.70	1.0	0.50	0.33	0.25	0.20	0.17

T is the fundamental translational period of the structure for the direction being considered.

(c) Inelastic Time History Analysis

For inelastic time history analysis, earthquake data appropriate to the site shall be used. The 5% damped elastic response spectra for the earthquake records used shall be compared with the basic elastic seismic hazard spectrum ($\mu = 1$) in Figure 5.2 and Table 5.2 appropriate to the site subsoil category, factored for the aspect of design being undertaken by the following factors:

(i) For determination of minimum strength requirements:

zone, risk, structural performance and design spectrum scaling factors, as specified in Figure 5.3 and Tables 5.5, 5.6 and 5.3 respectively.

(ii) For determination of inelastic effects, displacements and capacity actions (eg strain hardening effects):

zone and risk factors, as specified in Figure 5.3 and Table 5.5 respectively.

The ordinates of the input ground motion spectra shall not be less than 90% of the factored hazard spectrum over the range of the first three periods of vibration of the structure in the direction being considered.

The records shall contain at least 15 seconds of strong ground shaking or have a strong shaking duration of 5 times the fundamental period of the structure, whichever is greater. At least 3 different earthquake records of acceleration versus time shall be used.

5.2.3 Displacement Ductility Factor

Structure displacement ductility factor (μ) is defined in Figure 5.1.

The maximum value of μ to be used for design of any structure is six. Under certain circumstances μ shall be restricted further. Maximum allowable values of μ for various structural forms are listed in Table 5.4, and examples are shown diagrammatically in Figure 5.4. In all cases, the designer shall check that the structure as detailed is capable of sustaining the design value of μ.

Table 5.4: Design Displacement Ductility Factor, μ
Maximum Allowable Values

Energy dissipation system:	μ
Ductile or partially ductile structure (Type I), in which plastic hinges form at design load intensity, above ground or normal (or mean tide) water level.	6
Ductile or partially ductile structure (Type I), in which plastic hinges form in reasonably accessible positions, e.g., less than 2 m below ground, but not below normal (or mean tide) water level.	4
Ductile or partially ductile structure (Type I), in which plastic hinges are inaccessible, forming more than 2 m below ground or below normal (or mean tide) water level, or at a level reasonably predictable. Partially ductile structure (Type II). Spread footings designed to rock (unless a larger value can be specifically justified).	3
Hinging in raked piles in which earthquake load induces large axial forces.	2
"Locked in" structure (T = 0) Elastic structure.	1

Note: The design ductility factor for structures of limited capacity or demand is to be determined from actual structure characteristics.

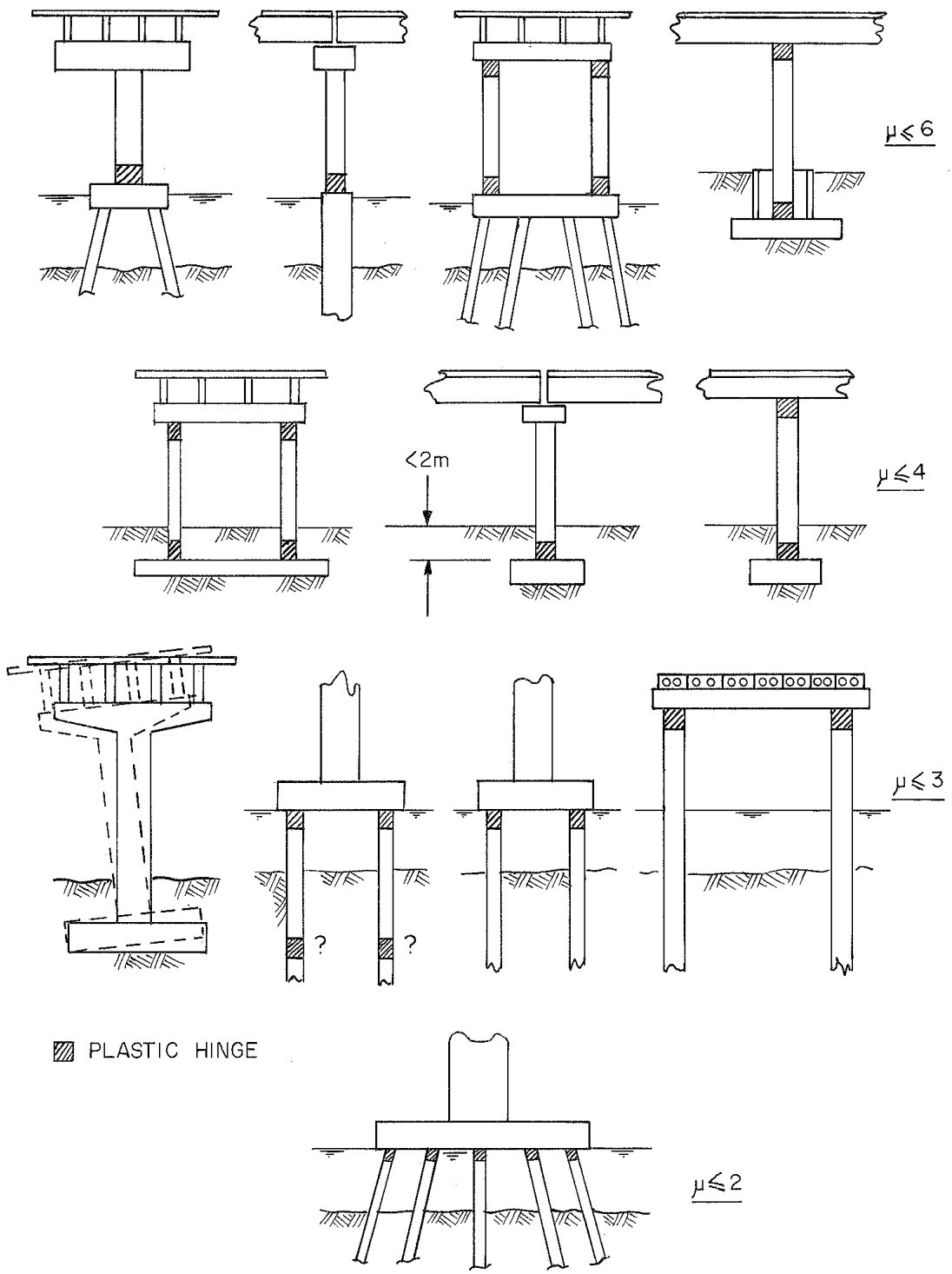

Figure 5.4: Examples of Maximum Values of μ Allowed by Table 5.4

5.2.4 Risk Factor, *R*

The value of *R* shall be not less than that specified in Table 5.5, according to the importance of the bridge.

Table 5.5: Risk Factor, *R*
Minimum Allowable Values for Bridges

	Importance Category	*R*
1	Bridges carrying more than 2500 vpd Bridges carrying or crossing motorways or railways Bridges on State Highways Nos: 1,2,3,3A,4,5,6,8,8A	1.30
2	Bridges carrying between 250 and 2500 vpd. Bridges on State Highways, if not in Category 1	1.15
3	Bridges carrying less than 250 vpd Non-permanent bridges.	1.00

The choice of category in Table 5.5 shall be based on the average number of vehicles per day at the time of design. However, judgement must be used, taking account of the road function and lack of an alternative route, or other factors which may justify higher importance than vehicle flow would indicate.

For design purposes, the relationship between the Risk Factor, *R*, and the return period of the equivalent earthquake may be assumed to be as shown in Figure 5.5[(1)]. For shorter return periods, the relationship is indicative only.

For assessment of the probability, *p*, of the design earthquake of return period t_s years being exceeded in any given period, *t* years, the following relationship may be used:

$$p = 1 - (1 - t_s^{-1})^t$$

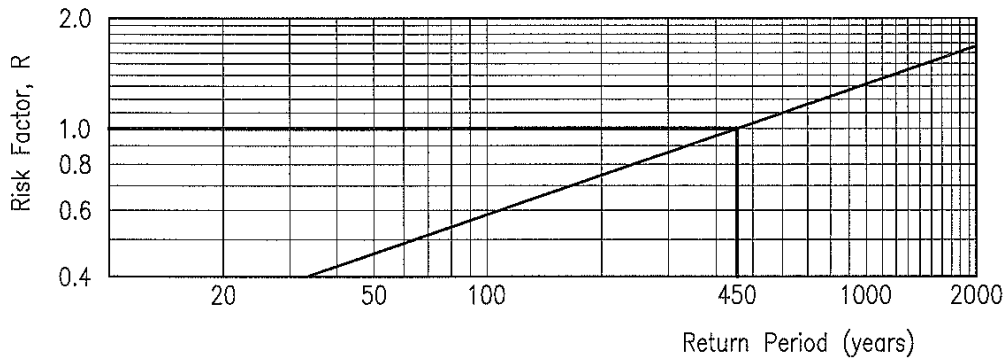

Figure 5.5 : Earthquake Return Period and Risk Factor

5.2.5 Structural Performance Factor

The value of the structural performance factor S_p shall be as specified in Table 5.6.

Table 5.6: Structural Performance Factor, S_p

	Site subsoil category	S_p
A	Rock or very stiff soil sites	0.90
B	Intermediate soil sites	0.80
C	Flexible or deep soil sites	0.67

5.2.6 Vertical Seismic Response

(a) General

Bridge superstructures shall be designed to remain elastic under both positive and negative vertical acceleration. The vertical seismic response specified in (b) below shall be considered to act non-concurrently to horizontal seismic response.

(b) Vertical Acceleration Response

Peak vertical acceleration for regular structures may be taken as:

$$a_v = 0.67\, C_E\, Z\, R\, g$$

Where: C_E = basic horizontal force coefficient for elastic structure (ie, $C\mu$ for $\mu = 1$), taken from Figure 5.2, and T is the natural period of vertical vibration.

Z = zone factor from Figure 5.3

R = risk factor from Table 5.5

g = acceleration due to gravity

5.2.7 Limitations on Displacement

Deflections of the structure under the effects of the design earthquake shall not be such as to:

(i) Endanger life

(ii) Cause loss of function

(iii) Cause contact between parts if such contact would damage the parts to the extent that persons would be endangered, or detrimentally alter the response of the structure or reduce the strength of structural elements below the required strength

(iv) Cause loss of structural integrity

5.2.8 P-Delta Effects

An analysis for P-delta effects shall be carried out unless any one of the following criteria is satisfied:

(a) The fundamental period does not exceed 0.45 seconds;

(b) The height of the structure measured from its base (i.e., top of footing, pile cap or foundation cylinder) does not exceed 15 m and the fundamental period does not exceed 0.8 seconds;

(c) The structural ductility factor does not exceed 1.5;

(d) The ratio of the design deflection at the level of the superstructure divided by the height above the base does not exceed $V/(7.5W_d)$,

Where: V = Horizontal shear force acting at the base of the structure
W_d = Total dead weight plus superimposed dead weight assumed to participate in seismic movements in the direction being considered

Where an analysis for P-delta effect is required, a rational analysis, which takes into account the post elastic deflections in the structure, shall be used to determine the P-delta effects.

Unless otherwise included in the analysis method adopted, increases in displacements due to P-delta effects shall be added to the displacements calculated by the analysis method.

5.3 Liquefaction

The liquefaction of loose saturated predominantly cohesionless soils (generally sand, silt and loose sandy gravels) during strong earthquake shaking shall be taken into consideration in the design of highways.

Sufficient geotechnical investigations, field and laboratory tests shall be carried out to assess the potential for liquefaction and consequential effects at the site.

Liquefaction assessment shall be carried out using appropriate state-of-the-art methods such as those given in the *Proceedings of the NCEER Workshop on Evaluation of Liquefaction Resistance of Soils*[3].

All possible consequences of liquefaction shall be taken into consideration in the design of bridges and highways. These may include :

- Foundation failure
- Loss or reduction of pile lateral and vertical load capacities;
- Subsidence
- Down-drag on piles due to subsidence;
- Floatation or uplift pressures on buried structures and chambers;
- Lateral spreading of ground towards free surfaces such as river banks, with consequential additional lateral loads on foundations;
- Lateral spreading of bridge approaches and other embankments.

Liquefaction hazards at the site shall be mitigated to a level consistent with the performance requirements for the particular road link. Measures to mitigate liquefaction hazard by ground improvement, such as using densification by dynamic compaction or vibrofloatation, drainage, or combined densification and drainage using vibro-replacement or stone columns, shall be considered to reduce the risk to the highway from liquefaction of the soils.

The design shall mitigate the risk associated with potential damage to highway structures from liquefaction, through ground improvement or provision of sufficient strength in the structures to resist liquefaction effects.

The risk from liquefaction and the consequences to the road away from structures shall be assessed. The liquefaction risk shall be mitigated consistent with the performance expectation for that road link in the road network, and any lifeline performance requirements. If the performance expectations for the road link and the network allow temporary loss of the road link after a major earthquake event, then risk of loss of the road from liquefaction may be acceptable. Recommendations to mitigate or manage the risk shall be presented in a geotechnical design report, and the written acceptance of Transit New Zealand shall be obtained, before such an approach is adopted.

5.4 Analysis Methods

5.4.1 General

Design forces on members shall be determined from analyses which take account of the stiffness of the superstructure, bearings, piers and foundations. The design load shall be applied to the whole structure. Consideration shall be given to the effects on structural response of likely variation in both structural and foundation material properties. Consideration shall also be given to the consequences of possible yielding of components of the foundation structure or soil and of rocking or uplift of spread footings on the response and energy dissipation characteristics of the structure. The type of analysis used shall be appropriate to the form of structure being designed.

5.4.2 Equivalent Static Force Analysis

(a) Distribution of Structural Mass

Where the equivalent static force analysis is used, the mass of the superstructure plus the pier caps and half the mass of the piers shall be considered concentrated at the level of the superstructure centroid.

The horizontal distribution of mass shall be taken into account in the analysis for transverse earthquake.

(b) Horizontal Torsion

Provision shall be made for variation in the seismic effect at supports, due to the centre of resistance and/or the centre of mass of the bridge not being in their calculated horizontal positions. A torsional moment in the horizontal plane, in

either direction, shall be added to the seismic loading already described, equal to:

$$V\ (1 + 0.025b)$$

Where: V is as defined in 5.2.2 (a)

b is the overall dimension, in metres, perpendicular to the applied seismic load, of the part of the structure considered to be continuous under that load.

The design seismic effect at any support shall not be less than that obtained by ignoring the effects of torsion.

(c) Rotational Inertia Effects

For superstructures supported on single-stem piers with wide hammerheads, the effects of superstructure and hammerhead rotational inertia in generating additional moments in the pier shall be considered, and provided for by appropriate detailing.

5.4.3 Dynamic Analysis

(a) Criteria Under Which Dynamic Analysis is Recommended

Dynamic analysis to obtain maximum horizontal forces and displacements or ductility demand, should be carried out where it is not appropriate to represent the structure as a single degree of freedom oscillator. Such cases are:

(i) Bridges where the mass of any pier stem (including any allowance for hydrodynamic effects) is greater than 20% of the mass of that part of the superstructure assumed to contribute to the inertia loading on the pier.

(ii) For transverse analysis, where the bridge or an independent length of bridge between expansion joints has abrupt changes in mass distribution, horizontal stiffness or geometry along its length, or is substantially unsymmetrical.

(iii) Bridges which describe a horizontal arc subtending more than 45°.

(iv) Bridges in which the seismic load resistance is provided by structural systems other than conventional piers and abutments.

(v) Suspension, cable-stayed and arch bridges.

(vi) Bridges with piers designed to rock.

(b) General

Dynamic analysis shall be undertaken for two orthogonal horizontal directions. For horizontally curved bridges one of these directions shall be the chord between the two abutments. Concrete member section properties shall be as defined in 5.3.4(a).

(c) Response Spectrum Analysis

The total maximum response shall be assessed using an appropriate method of combination, such as the square root of the sum of the squares, but taking account of the effect of closely spaced modes where necessary. Modes shall be considered to be closely spaced if their frequencies are within 15%.

Sufficient modes shall be included in the analysis to ensure that the effective mass included in the results is at least 90% of the total mass of the structure. The mass and stiffness of the total seismic load resisting system shall be included in the analysis.

(d) Inelastic Time History Analysis

The bridge shall be analysed using at least three different input motions for each direction and the maximum computed responses from at least the two most appropriate inputs shall be adopted for design.

Inelastic moment curvature and force displacement idealisations shall be appropriate to the materials being considered and the likely structural performance.

The overall damping in the bridge system expressed as a percentage of critical equivalent viscous damping shall generally be taken as 5%, to take account of the structural damping. The damping arising from radiation and inelastic behaviour in the foundation is included in the structural performance factor, S_p. For special structures such as long span steel cable supported bridges which remain elastic under earthquake loading, a lower value of damping may be appropriate.

The overall ductility demand computed by an inelastic time history analysis and accepted for the design shall not be greater than that permitted by Table 5.4.

5.4.4 Member Properties for Analysis

In calculating natural period, forces and deflections under seismic loading the following values shall be used:

(a) Concrete Member Section Properties

For highly stressed cracked sections (eg, piers and piles), the sectional rigidity EI value equivalent to the member having just reached yield of tensile reinforcement shall be assumed to apply over its whole length.

For uncracked sections (eg, prestressed concrete superstructures), the gross uncracked section value shall be assumed.

(b) PTFE/Stainless Steel Sliding Bearings

The coefficient of friction to be used for analysis shall be assessed on a conservative basis for the situation being considered. 0.02 shall be assumed as the coefficient of friction for situations where a minimum frictional force is appropriate. For situations where a maximum frictional force is appropriate a coefficient of friction of at least 0.15 shall be used.

(c) Variation of Material Properties

The effects of actual material properties varying significantly from those assumed for analysis and design shall be taken into account. The likely variation in foundation properties in particular shall be considered.

5.4.5 Seismic Displacements

(a) Where the structural system can be simulated as a single-degree-of-freedom oscillator, the maximum seismic displacement, Δ, of the centre of mass shall be taken as follows, unless a more detailed study is undertaken:

$$\Delta = \mu C_\mu g Z R S_P T^2 / (4\pi^2)$$

Where: Δ is in metres
T = the fundamental natural period, in seconds
g = 9.81 m/s^2
C_μ, Z, R and S_p are as defined in 5.2.2 (a).

Allowance shall be made at superstructure movement joints for out-of-phase response of two adjacent sections of a structure, by providing clearance derived from the square root of the sum of the squares of the maximum displacements.

(b) Where a response spectrum analysis is used, displacements derived from the analysis based on the basic elastic seismic hazard spectrum (μ=1) shall be factored by $Z\,R\,S_P$.

(c) Where time history analysis is used, displacements may be taken directly from the analysis results.

5.5 Member Design Criteria and Foundation Design

5.5.1 Ductile Structure

In a ductile structure, where the ductility is provided by plastic hinges, the hinge design* flexural strengths shall be at least equal to the moments from an analysis as described in 5.3. Hinge shear strength and design of members resisting the hinge moments shall be according to capacity design principles as defined in NZS 4203(1). Capacity design requirements will be considered satisfied if the over strength flexural capacity of a hinge is matched by at least its own nominal** shear strength, and the nominal shear and moment strength of resisting members.

Pile analysis shall also consider the consequences of flexure due to seismic ground distortions. Pile caps shall be designed to resist the vertical shear resulting from plastic hinging at pile tops, where this is considered likely.

---

* *Design Strength: The nominal strength multiplied by the strength reduction factor specified by the appropriate materials code.*

** *Nominal Strength: The theoretical strength of a member section, calculated using section dimensions as detailed and the lower 5 percentile characteristic material strengths.*

5.5.2 Partially Ductile Structure

Plastic hinges which form near design loading, and their resisting members, shall be designed as in 5.4.1 where practicable. Members which resist forces from plastic hinges which form at greater than design loading shall be designed on the same basis.

The nominal shear strength of piles should preferably exceed the shear developed by a possible mechanism at over strength. Judgement shall be used, taking into account the economic effect of such provision. At positions of potential lower plastic hinges, these members shall be detailed to ensure that they can sustain the likely limited rotations without significant damage.

5.5.3 Structure Remaining Elastic at Design Earthquake Loading

The pier and foundation member design forces shall be determined on the basis of an analysis as described in 5.3. If practicable or economically justifiable, to induce possible damage during seismic overload to occur in accessible locations, the design strengths of members below ground shall at least match the nominal flexural strengths of members above ground. If hinge formation is likely at greater than design loading, capacity design principles shall generally be applied, as in 5.4.1.

5.5.4 Structure Anchored to a Friction Slab

(a) Friction slabs may be assumed to provide seismic anchorage to a bridge abutment only if the integrity of the embankment within which the friction slab is located can be relied upon under earthquake conditions. The effect of seismic load transmitted by the friction slab to the embankment shall be taken into account in assessing the integrity of the embankment.

(b) The design value of horizontal restraint provided by a friction slab shall at least match the design force on the abutment specified in Figure 5.7.

(c) The design value of horizontal restraint provided by a friction slab shall be calculated as the lesser of the design value of friction between the slab and the underlying bedding, and the design value of friction between the bedding and the underlying natural ground or fill. The design value of friction shall be calculated assuming an appropriate strength reduction factor ϕ, as defined in Table 4.2. Allowance shall be made for inertia forces arising from the weight of the friction slab and overlying soil.

(d) The design strength of the connection between the friction slab and the abutment shall be at least 1.2 times the nominal sliding resistance of the friction slab.

5.5.5 Structure 'Locked-In' to the Ground Longitudinally

A `locked-in' structure shall have integral or semi-integral abutments, as described in 4.10. The peak horizontal ground acceleration coefficient to be used in computing the seismic inertia force shall be not less than as follows:

Peak acceleration $C_o g = C_{\mu=1,T=0} ZRS_p g$

Where: C_o = peak ground acceleration coefficient

$C_{\mu=1,T=0}$ = basic seismic hazard acceleration coefficient at $\mu = 1$ and $T = 0$ from Figure 5.2

g = acceleration due to gravity

Z = zone factor from Figure 5.3

R = risk factor from Table 5.5

S_p = structural performance factor from Table 5.6

Resistance to longitudinal seismic loads shall be provided by pressure of soil against each abutment alternately. Earth pressure shall be determined as in 5.6, but to allow for possible seismic overload, greater pressure shall be allowed for, up to a maximum equivalent to passive pressure, if practicable or economically justified.

Forces in the foundations due to consequent soil deformation shall be determined by an elastic analysis, including the effects of soil stiffness. Such a structure shall not be assumed to be locked-in for transverse earthquake, unless a specific resisting system is designed.

5.5.6 Structure on Pile/Cylinder Foundations

(a) When estimating foundation stiffness to determine the natural period(s) of vibration of the structure and the curvature ductility demand on plastic hinges, a range of soil stiffness parameters typical for the site shall be considered. Allowance shall be made for:

- residual scour;
- pile/soil separation in cohesive soils to a depth of two times pile diameter;
- liquefaction of soil layers.
- the potential for soil stiffness and strength degradation under repeated cyclic loading associated with earthquakes.
- The non-linear stress-strain properties of the resisting ground.

(b) The design of pile foundations shall take account of:

- pile group action;
- strength of the foundation as governed by the strength of the soil in which the piles are embedded;
- the effect of liquefaction-induced lateral spreading of the ground.
- additional loads on piles such as negative skin friction (down drag) due to subsidence induced by liquefaction or settlement of the ground under adjacent loads (such as the approach embankment).

The horizontal support provided to piles by liquefied soil layers and overlying non-liquefied layers shall be assessed using appropriate current methods for

determining liquefied or post-liquefied soil strength and stiffness. Alternatively, for liquefied soil layers their horizontal support to piles may be conservatively ignored.

(c) The required strength of the piles, pile caps and the connection between these elements to resist the loads induced by seismic action shall be in accordance with the criteria above as appropriate. In addition:

(i) the design tensile strength of the connection between a pile and the pile cap shall not be less than 10% of the tensile strength of the pile;

(ii) the region of the pile extending for the larger of one pile diameter or 500 mm from the underside of the pile cap shall be reinforced for confinement as a plastic hinge.

(d) In the region of a steel shell pile immediately below the pile cap, the contribution of the shell (after deducting corrosion losses) may be included with respect to shear and confinement but shall be neglected in determining moment strength unless adequate anchorage of the shell into the pile cap is provided.

(e) Analyses of the effect of seismic loading on groups of raked piles shall take account of the simultaneously induced axial forces and flexure in the piles and rotation of the pile cap due to lateral displacements.

5.5.7 Structure On Spread Footing Foundations

The soil stress induced by Group 3A loading shall not exceed the product of the nominal bearing capacity of the soil and the appropriate strength reduction factor given in Table 4.2. The foundations shall be considered under the combined static and earthquake loads.

5.5.8 Structure on Rocking Foundations

(a) If pier spread footings are expected to rock under design earthquake conditions, a time history dynamic analysis shall be performed to study the structure's behaviour, in accordance with 5.3.3. The structure shall be proportioned to limit the ratio of the total displacement of the centre of mass of the structure to the displacement of the centre of mass of the structure at initiation of rocking, to less than 3, unless evidence to justify a higher value can be produced.

(b) The nominal moment strength at the base of the pier stem shall be greater than 1.3 times the corresponding forces determined by analysis, as in 5.3. The footing and pier stem shall be designed on capacity design principles, to ensure that any yielding occurs in the pier stem, assuming design soil bearing strength. Capacity design requirements will be satisfied if the over strength flexural capacity of the pier hinge is matched by at least its own nominal shear strength, and the design moment and shear capacity of the footing.

The potential plastic hinge region at the base of the pier stem shall be detailed to ensure that it can sustain the possible limited rotation.

(c) The interaction of the structure and foundation during rocking shall be carefully considered in the assessment of a rocking foundation, and the potential for foundation strength and stiffness degradation shall be taken into account.

(d) An assessment shall be made of the performance of both the structural and non-structural components of the bridge as a consequence of the vertical and horizontal movements associated with the rocking motion of the piers, to ensure that structural integrity will be maintained under both design, and more extreme earthquake conditions.

5.5.9 Structure With Energy Dissipating Devices

A structure incorporating energy dissipating devices shall be designed in a similar manner to a ductile structure, as in 5.4.1. The energy dissipating devices shall be treated similarly to plastic hinges, and members resisting the forces induced in them designed, using capacity design principles.

Energy dissipating devices shall have had their performance substantiated by tests. Their long term functioning shall be assured by protection from corrosion and from water or debris build-up. The devices shall be accessible for regular inspection and maintenance, and to enable them to be removed and replaced if necessary.

Design guidance is contained in RRU Bulletin 84, Vol 3[(4)].

5.6 Structural Integrity and Provision for Relative Displacements

5.6.1 Clearances

(a) Structural Clearances

At locations where relative movement between structural elements is designed to occur, sufficient clearance shall be provided between those elements and around such items as holding down bolts, to permit the calculated relative movement under design earthquake conditions to occur freely without inducing damage. Where two components of earthquake movement may be out of phase, the earthquake component of the clearance provided may be based on the square root of the sum of the squares approach. Long term shortening effects and one third of the temperature induced movement from the median temperature position shall be taken into account as implied by the load combinations in Table 3.2.

On short skew bridges, consideration shall be given to increasing the clearance between spans and abutments by up to 25% to counter possible torsional movement of the span with respect to the substructure.

(b) Deck Joints

At temperature movement deck joints, clearances may be less than specified in (a), provided damage due to the design earthquake is limited to sacrificial devices (knock-up or knock-off devices), which have intentional weakness which permits minor damage to occur in a predetermined manner. In such circumstances the range of movement to be accommodated by the joint shall

not be less than one quarter of the calculated relative movement under design earthquake conditions, plus long term shortening effects where applicable, and one third of the temperature induced movement from the median temperature position. Damage to deck joint seal elements due to the joint opening under this reduced earthquake movement is acceptable, provided mechanical damage is avoided.

5.6.2 Horizontal Linkage Systems

(a) General

The security of all spans against loss of support during seismic movement shall be ensured either by a positive horizontal linkage system between the span and the support, or by specific provision for large relative displacements, as in the situations described below.

Linkage may be either tight or loose as described in (b) and (c), according to whether relative longitudinal movement is intended.

Requirements for provision of linkage are as follows:

- Longitudinal linkage is required between all simply supported span ends and their piers, and between the two parts of the superstructure at a hinge in the longitudinal beam system.
- Longitudinal linkage is not required at an abutment, provided that the overlap requirements of 5.5.3 are complied with.
- Longitudinal linkage is not required at a pier, for a superstructure with full moment continuity, provided the displacement of the reaction point would not cause local member distress.
- Transverse linkage is not required for any type of superstructure, provided that the transverse strength and stability of the span is sufficient to support an outer beam or truss if it should be displaced off the pier or abutment.

Acceptable means of linkage are linkage bolts. Shear keys and bearings are not an acceptable means. Linkage elements shall be ductile, in order to ensure integrity under excess relative movement.

(b) Tight Linkage

A tight linkage shall be used, where relative horizontal movement is not intended to occur under either service loads or seismic loading. The linkage system shall be designed to have a design strength not less than the force induced therein under design seismic conditions, nor less than that prescribed below for loose linkage. Where applicable, rubber pads shall be provided between the two elements of the bridge linked together in this fashion, to enable relative rotation to occur.

(c) Loose Linkage

At a position where relative horizontal movement between elements of the bridge is intended to occur under earthquake conditions, the linkage shall be designed to be `loose', ie, sufficient clearance shall be provided in the system so

that it does not operate until the relative design seismic displacement is exceeded. Loose linkage is intended to act as a second line of defence against span collapse in earthquakes more severe than the design event or in the event of pier top displacement resulting from excessive pier base rotation. Toroidal rubber buffers as shown in Appendix C shall be provided between the elements of the bridge which are loosely linked. The elements of loose linkage between a span and its support shall have a design strength not less than that required to resist a force equal to at least 0.2 times the dead load of the contributing length of superstructure. The contributing length of superstructure shall generally be the smaller of two unequal lengths, except in the case of a short length (e.g., a suspended span) between two longer lengths. In this case, the strength shall be based on the longer lengths.

(d) Overlap Requirements

Overlap dimensions are defined in Figure 5.6. They apply in both longitudinal and transverse directions.

To minimise the risk of a span being displaced off either its bearings or the pier or abutment under earthquake conditions in excess of the design event, the bearing overlap at sliding or potentially sliding surfaces and the span/support overlap given in Table 5.7 shall be provided.

On short skew bridges, overlap requirements shall be increased by up to 25%. Where there are two components of earthquake movement which may be out of phase, the earthquake component of the overlap requirements may be based on the square root of the sum of the squares approach.

Table 5.7: Minimum Overlap Requirements

Linkage system	Span/Support Overlap	Bearing Overlap
No linkage system	2.0 E + 100 mm (400 mm minimum)	1.25 E
Loose linkage system	1.5 E' + 100 mm (300 mm minimum)	1.0 E'
Tight linkage system	200 mm	-

Where: E = relative movement between span and support, from median temperature position at construction time, under design earthquake conditions, EQ + SG + TP/3

E' = equivalent relative movement at which the loose linkage operates, ie, E' ≥ E

EQ, SG and TP are displacements resulting from load conditions described in Section 3, and combined as in Table 3.2.

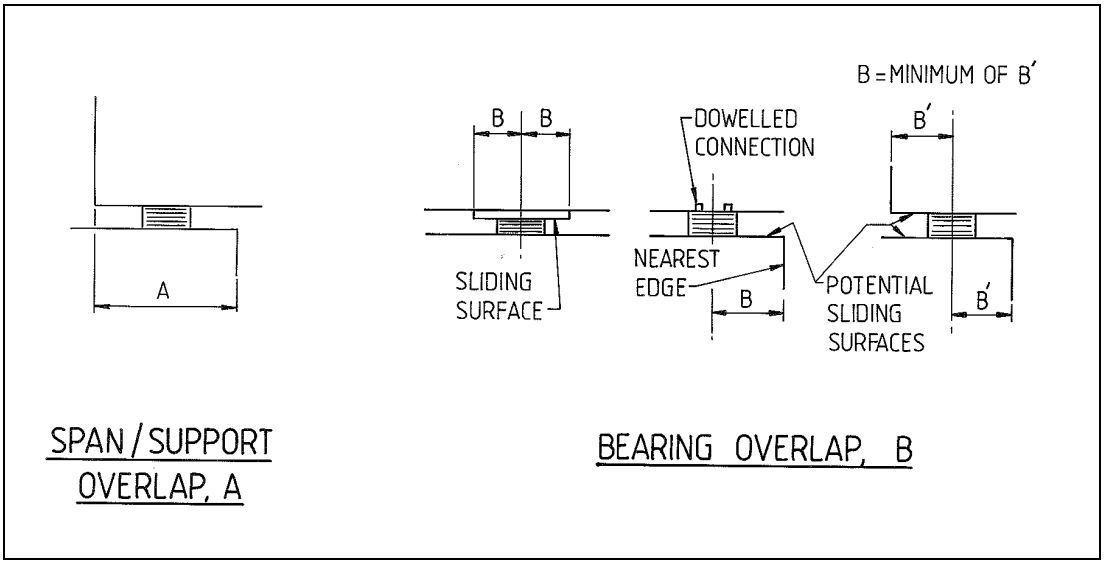

Figure 5.6: Overlap Definition

5.6.3 Holding Down Devices

Holding down devices shall be provided at all supports and structural hinges where the net vertical reaction under design earthquake conditions is less than 50% of the dead load reaction. The holding down device shall have sufficient strength to prevent uplift of the span from its support, or separation of the two hinged members under design earthquake conditions and shall have a minimum design strength to resist a force equal to 20% of the dead load reaction. An elastomeric bearing shall not form part of a holding down device. In the case of a cantilever span, either free or propped, the minimum design strength of the holding down device at the end of the cantilever shall be calculated on the basis of 20% of the dead load reaction which would exist if the cantilever span was simply supported.

5.6.4 Effects of Concurrent Orthogonal Movement

Provision shall be made for the effects on linkage and bearing assemblies of relative horizontal seismic movement between bridge members occurring concurrently in the longitudinal and transverse directions.

5.7 Earth Retaining Structures

This section covers:

(a) non-integral bridge abutments (as compared with integral or semi-integral abutments defined in 4.11) and independent retaining walls that are associated with bridges. An abutment is defined as a substructure system that incorporates earth retaining members, and also supports part of the superstructure. Wing walls are part of the abutment if they are integral with it. Independent walls that are associated with bridges are defined as those walls that are not integral with the bridge abutment and which if removed would result in collapse or major settlement of approach fills at the bridge abutments.

(b) Walls not associated with bridges.

5.7.1 General

(a) The design horizontal ground acceleration and velocity to be used in computing inertia forces and displacements of non-integral abutments and independent walls shall be as follows:

Design acceleration $C_o g$ = 0.25 Z R g
Design velocity v_o = 0.36 Z R

Where: C_o = design ground acceleration coefficient
g = acceleration due to gravity
v_o = design ground velocity (m/s)
Z = zone factor from Figure 5.3
R = risk factor from Table 5.8.

Note: The design ground acceleration has been derived using the basic acceleration coefficient for T = 0, from Figure 5.2 for the appropriate site subsoil category.

Table 5.8: Risk Factor, *R*
Minimum Allowable Values for Retaining Walls

Where a wall satisfies the criteria of more than one importance category, the requirements of the higher category shall apply.

	Importance Category	*R*
1	Non-integral bridge abutment walls and independent walls associated with bridges	See Table 5.5
2	Walls not associated with bridges	
(a)	Wall supporting roadway carrying more than 2500 vpd. Wall providing protection or support to motorway or railway. Wall supporting State Highway. Wall providing protection to adjacent property, the consequential reinstatement cost of which would exceed $970,000*.	1.15
(b)	Wall supporting roadway carrying between 250 and 2500 vpd. Wall providing protection to adjacent property, the consequential reinstatement cost of which would be less than $970,000(*). Wall exceeding 3 m in height.	1.0
(c)	Wall not in categories (a) or (b) – specific seismic design is not required.	-

* Values quoted are at a *Statistics New Zealand Producers Price Index (Outputs)* (2), Construction Index 1735 as for 30 June 1992. Values shall be corrected to the current index.

(b) All structural components of abutments and walls shall have a design strength not less than the forces calculated using the relevant ultimate limit state load combinations specified in 3.5. The wall shall be checked for stability subject to the appropriate load combinations and a strength reduction factor for the soil not exceeding 0.9, except that where the wall is designed to sustain permanent displacements during earthquake, the load factors may be taken as unity.

(c) Structural design of abutments and walls shall generally follow capacity design principles.

5.7.2 Earth Pressures and Structure Inertia Forces

(a) The following earth pressure effects shall be taken into account:

P_s - Force due to static earth pressure (including compaction force, P_c where appropriate);

ΔP_E - Increment or decrement in earth pressure due to earthquake;

P_F - Increment of force on wall due to its displacement towards the static backfill.

In assessing earth pressure effects, due account shall be taken of the relative stiffnesses of the wall, backfill, foundations and any tie-back anchors.

The earthquake increment of earth pressure (ΔP_E) shall be derived using the rigid, stiff or flexible wall pressure distributions, depending on the wall movements, given in the Transit New Zealand Road Research Unit Bulletin No 84[(5)]. As recommended in the document, the widely used Mononobe-Okabe earthquake pressure increments shall be used only when there is sufficient wall movement for the wall to be "flexible". Passive earth pressure decrements due to earthquake shaking shall be applied for the earthquake load case where passive pressures are relied on to provide stability, and these can be derived using the approach provided in the Bulletin.

(b) The structural inertia forces to be taken into account shall include:

P_1 - The inertia force on the abutment or wall due to ground acceleration acting on the wall, and the soil block above the heel of the wall;

$C_o W_d$ - The inertia force on a locked-in superstructure, of seismic weight W_d, moving at ground acceleration, C_o;

P_B - The force, if any, transmitted between the superstructure and the abutment. This force is the sum of that transmitted by the bearings, and that transmitted by a load limiting device if any.

The force due to sliding bearings shall be calculated assuming the maximum likely friction coefficient. A value of 0.15 shall be assumed unless another value can be justified. The force due to other bearings shall be the product of the total support stiffness and the seismic displacement, Δ. The calculation of

Δ shall take account of the relative stiffness of the various supports, and the relative stiffness of the abutment bearings and foundations.

(c) The appropriate forces shall be combined as shown in Figure 5.7. The structures shown in (a) and (b) represent extremes of relative resistance provided by the abutment piles and the backfill. Designs shall take account of intermediate conditions applying as appropriate. In both abutment cases the probability of P_B being out of phase with $\Delta P_E + P_I$ may be taken account of by applying the square root of the sum of the squares of the forces.

5.7.3 Design Performance

(a) Permanent Displacement of Walls in Earthquakes

Retaining structures may be designed to remain elastic under the design earthquake or to allow limited controlled permanent outward displacement under strong earthquake shaking.

Walls designed on the basis of permissible permanent outward displacement under strong earthquake shaking shall comply with all relevant recommendations of the Road Research Unit Bulletin 84[(5)]. The design displacement shall be assessed based on appropriate current methods such as those based on the Newmark Sliding Block approach as presented in this bulletin, or the methods provided by Ambraseys and Srbulov, (1995)[(6)]. The design peak ground acceleration for assessment of the displacements shall be based on Section 5.5.5, with a structural performance factor (Sp) of 1, or on site-specific seismicity studies as required under Section 5.2.2, and not the design acceleration given in Section 5.7.1 (a).

It shall be noted that significant vertical accelerations shall be taken into consideration in the design of retaining structures. The energy and frequency content of earthquake shaking as well as the vertical earthquake motions (which tend to be high particularly in near field situations) have a significant effect on retaining wall performance in strong earthquakes. The effects of vertical shaking have been observed in recent overseas earthquakes as well as in recent research sponsored by the Earthquake Commission Research Foundation (Brabhaharan et al, 2003[(7)]).

The uncertainty in the assessment of wall displacements using peak ground accelerations shall be taken into consideration in the assessment of likely wall displacements, although the peak ground acceleration based estimates remain the only quantitative estimation methods currently available.

In the design of retaining structures that are allowed limited permanent outward displacement in the design earthquake:

(i) The soil strength parameters used for assessment of sliding displacement shall be consistent with large soil strains from displacements (eg residual strength for cohesive soils).

(ii) Walls shall be proportioned to ensure sliding, rather than overturning or internal instability (in the case of mechanically stabilised earth structures).

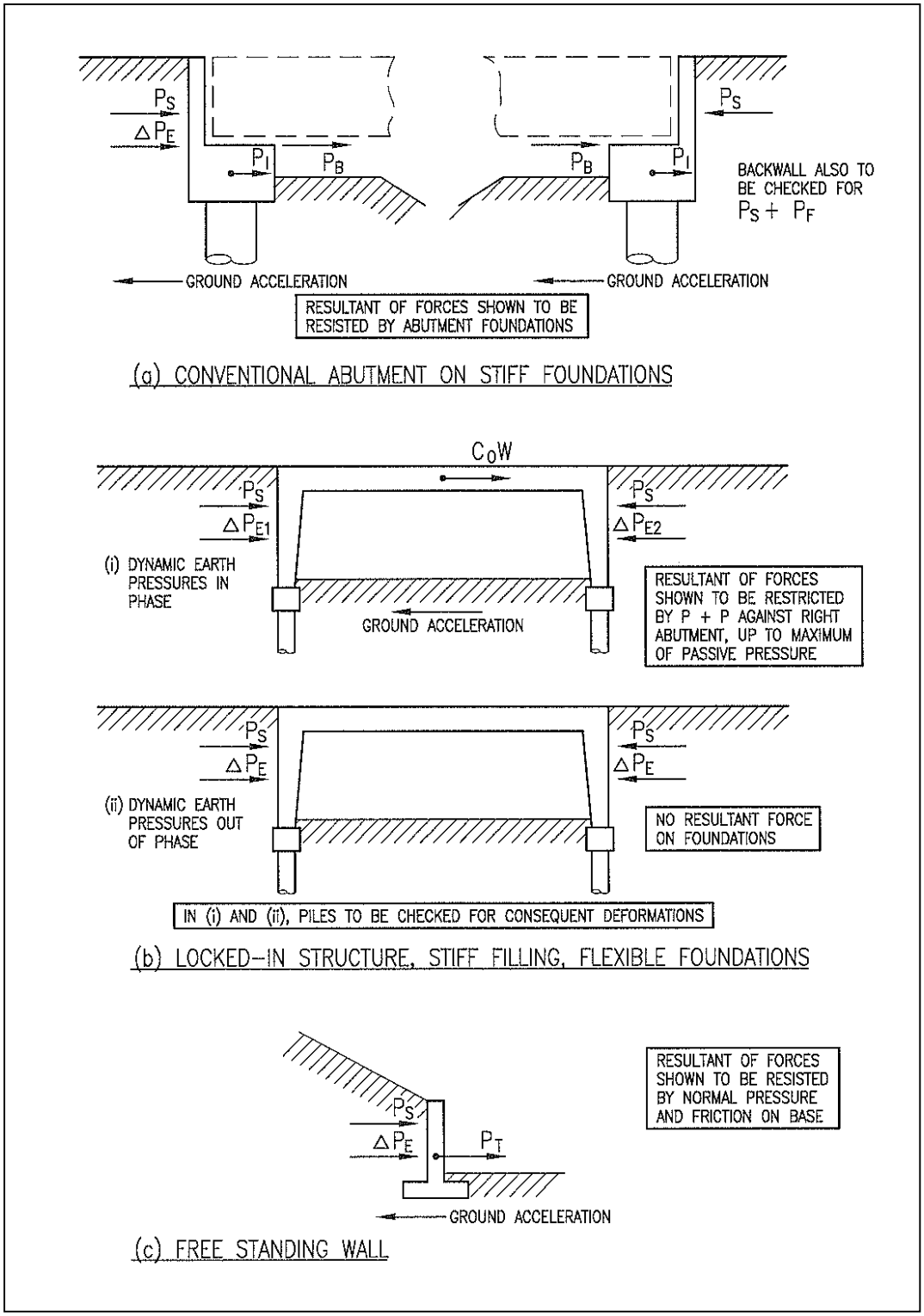

Figure 5.7: Seismic Force Combinations on Abutments and Retaining Walls

(iii) The expected displacement due to the design earthquake shall not encroach into minimum clearances from road carriageways and railway tracks or infringe property boundaries, or cause damage to services that may exacerbate movements or cause instability.

(iv) The probable ranges of soil parameters shall be considered when estimating the upper and lower bounds of threshold acceleration to cause wall displacement.

(v) It shall be recognised that, in near-field situations, the vertical accelerations associated with strong earthquake shaking would lead to larger displacements than assessed using peak ground accelerations alone.

(vi) The assessed likely displacements of the structure arising that would arise from sliding due to the design earthquake shall not exceed the values given in Table 5.9.

Table 5.9: Maximum Allowable Displacement

Wall Situation	Wall Type	Maximum Displacement
Wall supporting bridge abutments	All types	Nil
Walls above road level supporting structures within 2 H* of wall face at top of wall	All types	Nil
Walls supporting road carriageway with AADT > 2500	Rigid Wall	100 mm
	Flexible wall capable of displacement without structural damage	150 mm
Walls supporting road carriageway with AADT < 2500	Rigid Wall	100 mm
	Flexible wall capable of displacing without structural damage	200 mm

Notes :

(i) H is the height of the retaining wall including the height of any slope above.

(ii) The designer shall ensure that the displacements will not cause damage to adjacent structures or services.

(b) Walls Supporting Abutments

Abutments walls shall be designed to prevent permanent displacement under the design earthquake load, except where the bridge abutment and superstructure can be designed to remain serviceable with limited abutment displacement and without damage to the bearings, and can retain adequate allowance for temperature change, vibration, etc. This shall be substantiated in the design statement and the designer shall obtain the acceptance of Transit New Zealand.

(c) Gravity and Reinforced Concrete Cantilever Walls

Gravity and reinforced concrete cantilever walls may be designed so that either:

(i) The wall remains elastic and does not suffer any permanent displacement under the design earthquake load;

or

(ii) Limited permanent outward movement due to soil deformation is accepted, and the wall is designed to avoid yielding of the structural elements wherever practicable. In this case provision shall be made to accommodate the calculated displacement with minimal damage, and without encroaching on clearances. Walls other than those supported on piles shall be proportioned to slide rather than rotate. Due account shall be taken of the probable range of soil strength when estimating the upper and lower bounds of the threshold acceleration to cause wall displacement. The design resistance to overturning shall be greater than 1.25 times the overturning moment derived from the upper bound combination of forces to cause sliding.

(d) Anchored Walls

Anchored walls shall be designed to remain elastic under the seismic loading specified in 5.7.1(a). Consideration shall be given to the consequences of tie and wall flexibilities under design conditions. Walls shall be detailed to ensure that under seismic overload, controlled displacement of the wall will occur through yielding of the anchor material, and sudden failure will be avoided.

Particular attention shall be given to the post-earthquake effectiveness of the tie corrosion protection.

(e) Mechanically Stabilised Earth Walls

(i) The Road Research Unit Bulletin 84[(5)] provides a basis for the seismic design of mechanically stabilised earth walls, and shall be complied with. The Transfund New Zealand Research Report No 239 *Guidelines for*

Design & Construction of Geosynthetic-Reinforced Soil Structures in New Zealand(8) also provides guidelines for the seismic design of such walls. Section 4 provides guidance on the design of soil nailed walls and design codes such as FHWA-SA-96-069R *Manual for the Design and Construction Monitoring of Soil Nailed Walls*(9) also provide guidance.

(ii) A wall required to avoid permanent displacement shall be designed to remain elastic and stable under the design loading.

(iii) The connection strengths between the reinforcements and the facing shall be such that the failure under earthquake overload is always ductile, that is, by either pull out of the reinforcement through granular materials without loss of pullout capacity with displacement, or by yielding or deformation of the reinforcement, and not by failure of the connections. The strength margin over connection failure shall be at least 1.3.

(iv) A wall intended to undergo permanent displacement shall be designed so that the outward movement results from block sliding of the reinforced block as a whole and not due to internal instability or pull out of the reinforcement.

(v) Using Strip reinforcement, under earthquake overload, deformation shall preferably be by pull out of the reinforcement strips or, where this is impractical, by ductile extension of the reinforcement strips.

(vi) Using grid reinforcement, particularly geogrids with closely spaced transverse members, under earthquake overload, any internal deformation shall be through ductile elongation of the reinforcement rather than pullout of the reinforcement through the soil.

(vii) Where design is for pull out, the nominal strength of the connection between the reinforcement and the wall facing shall be at least twice the pull out force calculated from the probable apparent coefficient of friction. Upper and lower bounds of the threshold acceleration required to produce incipient failure shall be calculated by considering the reinforcement acting both horizontally and along the failure surface and allowing for probable variations in the pull out resistance and yield strength of the reinforcement. Stability shall be checked under the upper bound acceleration. Design displacements shall not encroach on required clearances.

5.7.4 Culverts and Subways

(a) Small Structures (Maximum cross-section dimension less than 3 m)

Detailed analysis for earthquake induced forces is not required for small culverts and subways. Concrete reinforcement shall be detailed to provide structural tolerance to ground deformation, with particular attention to corner details and bar termination.

(b) Large Structures (Maximum cross-section dimension 3 m or more)

(i) Where the soil cover is less than the height of the structure, rigid structures shall be designed for the forces shown in Figure 5.8(a). In this figure, W_s is the static force due to the weight of soil above the culvert. Other symbols are defined in 5.6.2.

(ii) Where the depth of the soil over the structure exceeds the height of the structure, earthquake induced stresses on the cross-section may be determined by applying the static orthogonal stresses at "infinity" as shown in Figure 5.8(b). Comments are made on this method in *Earth Retaining Structures*[10].

(iii) Flexible corrugated steel plate structures may be assumed to interact with the soil to produce a uniform distribution of earth pressure around the periphery.

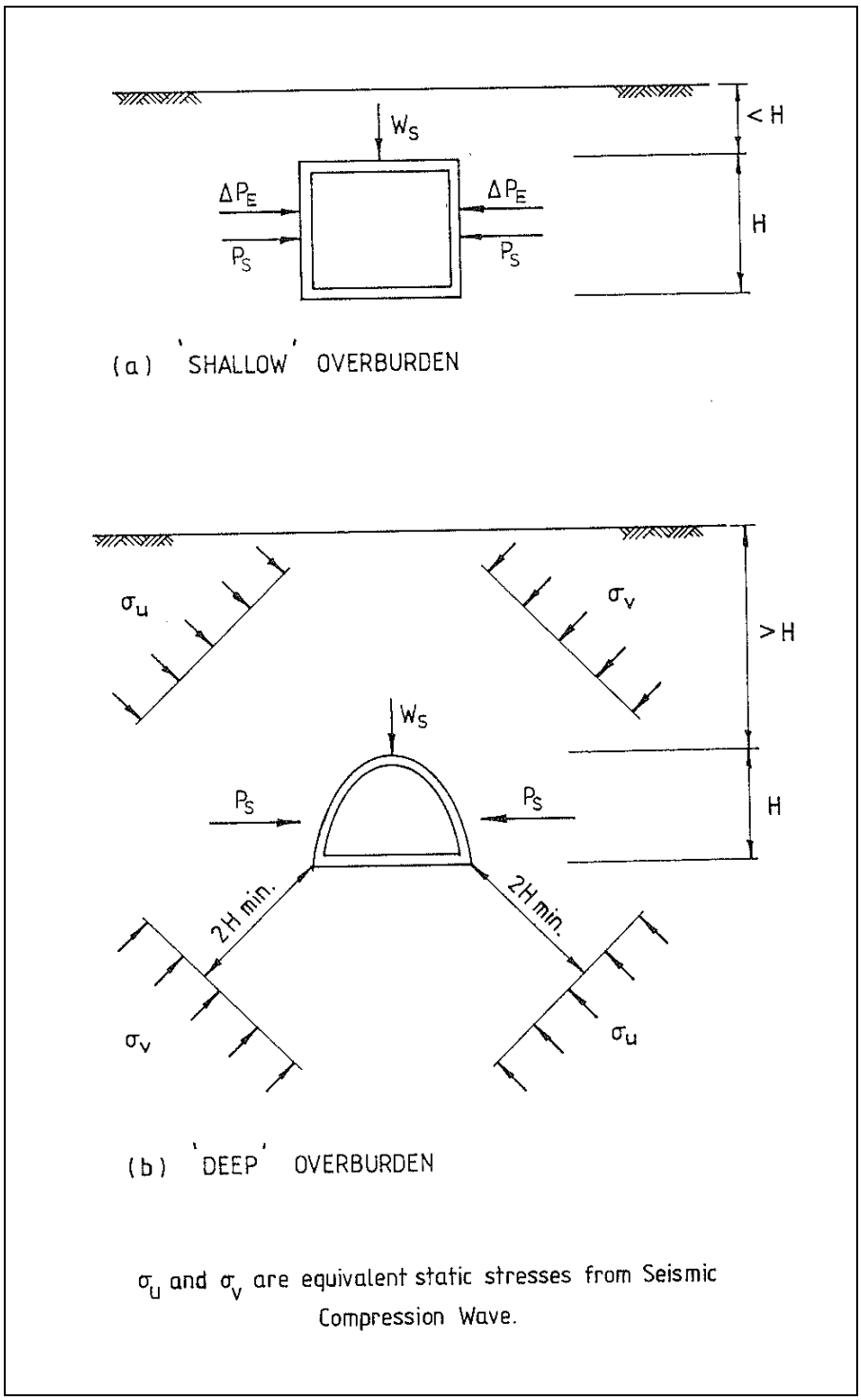

(Ex NZNSEE Bulletin[10])

Figure 5.8: Forces on Large Underground Structures

5.8 References

(1) NZS 4203:1992, *Code of Practice for General Structural Design and Design Loadings for Buildings*, Standards New Zealand.

(2) ____, *Producers Price Index (Outputs)*, Department of Statistics, published quarterly.

(3) NCEER, 1997, *Proceedings of the NCEER Workshop on Evaluation of Liquefaction Resistance of Soils*, (Edited by Youd, TL and Idriss, IM,) Technical Report NCEER-97-0022, National Center for Earthquake Engineering Research , Buffalo, NY, USA.

(4) RRU, 1990, *Seismic Design of Base Isolated Bridges Incorportating Mechanical Energy Dissipators*, Bulletin 84, Vol 3, Road Research Unit, Transit New Zealand, Wellington.

(5) Wood, JH and Elms, DG, 1990, "Seismic Design of Bridge Abutments and Retaining Walls", RRU Bulletin 84, *Bridge Design and Research Seminar 1990*. Vol. 2, Transit New Zealand, Wellington, New Zealand.

(6) Ambraseys, N and Srbulov, M., 1995, "Earthquake Induced Displacements of Slopes", *Soil Dynamics and Earthquake Engineering*, Vol 14.

(7) Brabhaharan, P, Fairless, GJ, and Chapman, HE, 2003, "Effect of vertical earthquake shaking on displacement of earth retaining structures", *Proceedings of the Pacific Conference on Earthquake Engineering,* New Zealand Society for Earthquake Engineering. Christchurch. New Zealand.

(8) Murashev, AK, 2003, *Guidelines for Design & Construction of Geosynthetic-Reinforced Soil Structures in New Zealand,* Research Report No 239, Transfund New Zealand, Wellington

(9) Federal Highway Administration, 1998, *Manual for the Design and Construction Monitoring of Soil Nailed Walls,* Publication No. FHWA-SA-96-069R, US Department of Transportation, Washington DC

(10) NZNSEE, 1980, *Papers Resulting from the Deliberations of the NZNSEE Discussion Group on Seismic Design of Bridges*, Bulletin of the New Zealand National Society for Earthquake Engineering, September 1980 – also published in Bulletin 56, Road Research Unit, National Roads Board, 1981.
Section 9: Mathewson, M.B., Wood, J.H., and Berrill, J.B., "Earth Retaining Structures".